REVISIONS			
LTR	DESCRIPTION	DATE	APPROVED
A	QUICK TWIST SERIES	01/01/04	JAG

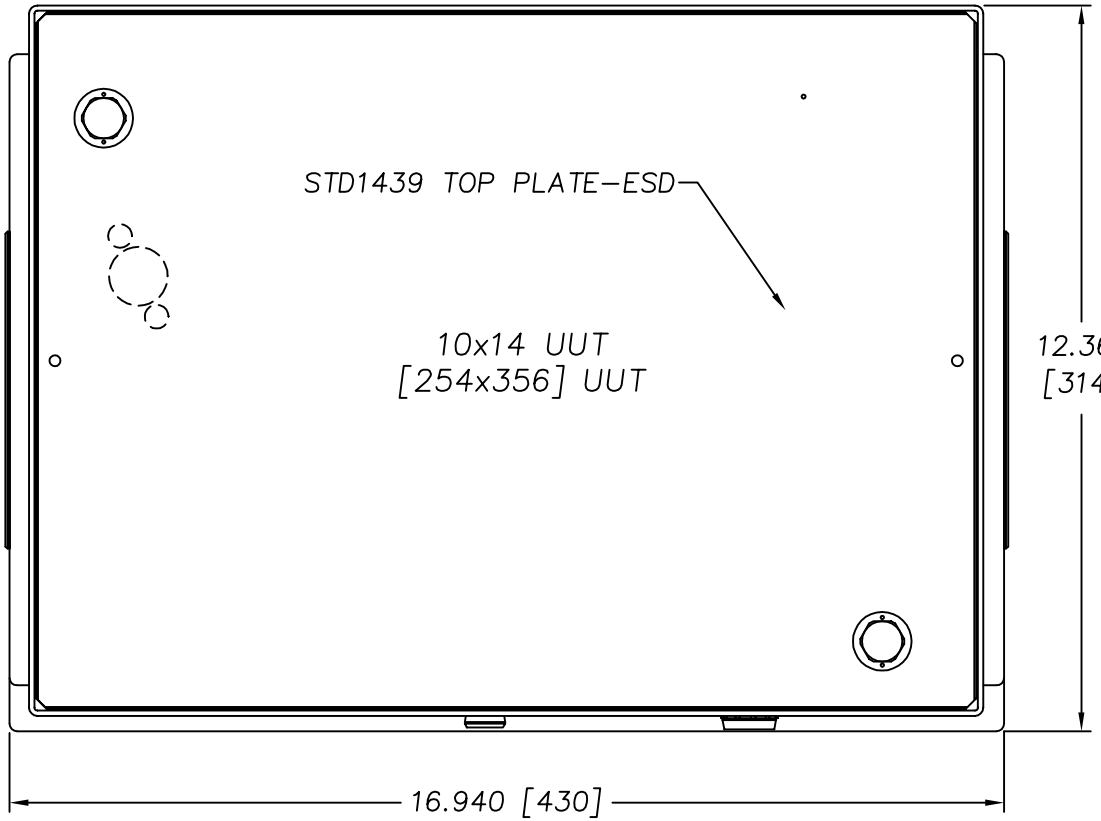

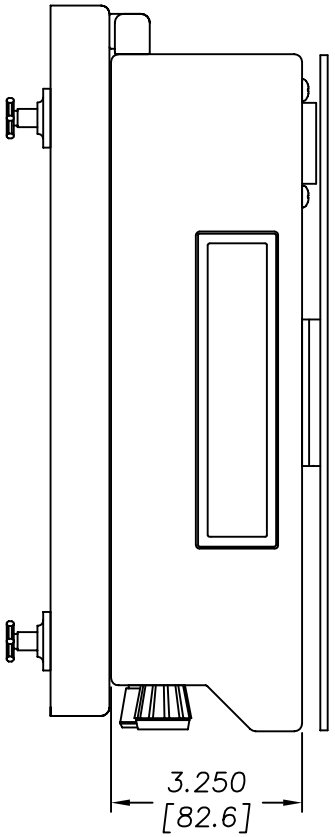

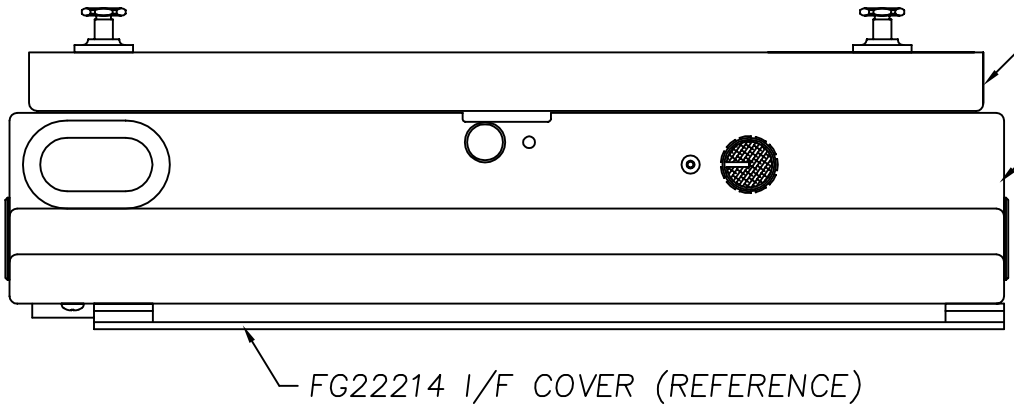

THIS DRAWING IS FOR ASSEMBLY REFERENCE ONLY.

NEXT ASSY	USED ON	UNLESS OTHERWISE SPECIFIED DIMENSIONS ARE IN INCHES (MM) TOLERANCES ARE: .XX ±.015 .XXX ±.005 ANGLES ±1/2°	H+W TEST PRODUCTS SEEKONK, MASSACHUSETTS
APPLICATION		MATERIAL: SEE BILL OF MATERIALS	FIXTURE ASSEMBLY GENRAD 2272/228X
		FINISH: NONE	SIZE: E; FSCM NO.; DRAWING NO.: RG21004; REV.: A
		DO NOT SCALE DRAWING	SCALE FULL; DRAWN JAG 11/8/95; SHEET 1 OF 1

FILE NO. RG21004A