REVISIONS			
LTR	DESCRIPTION	DATE	APPROVED
A	RELEASE TO PRODUCTION	09/01/2008	JAG

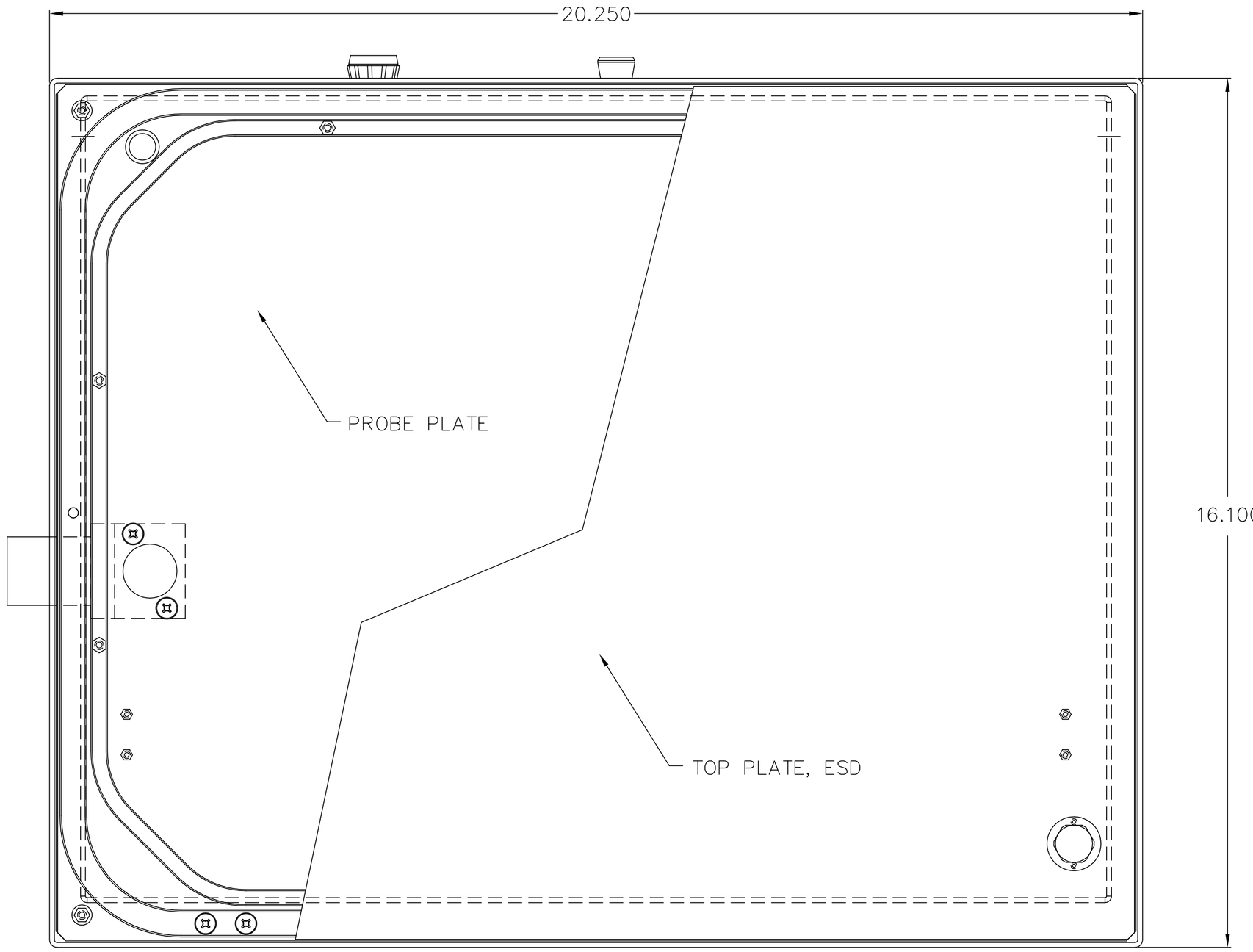

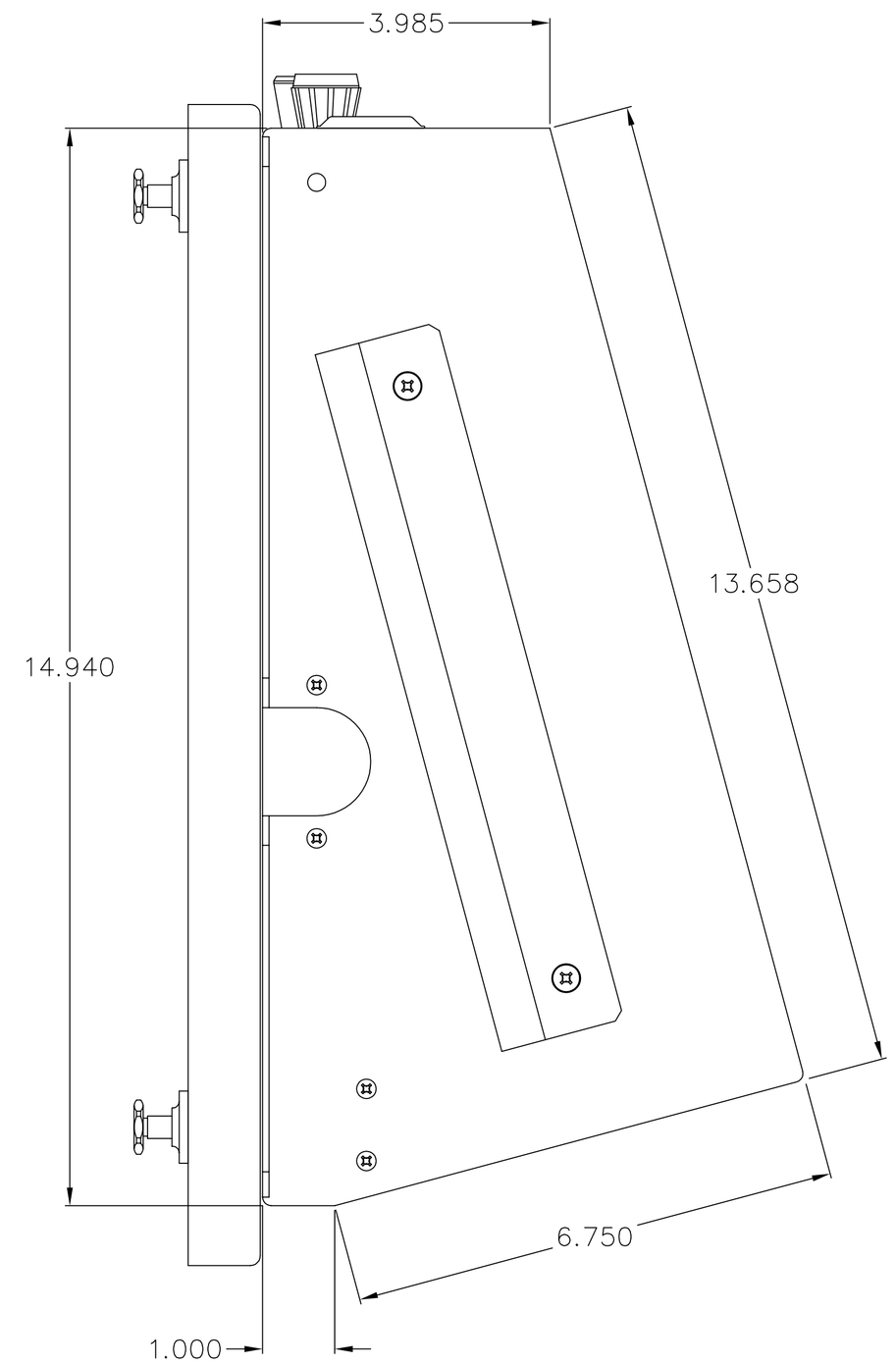

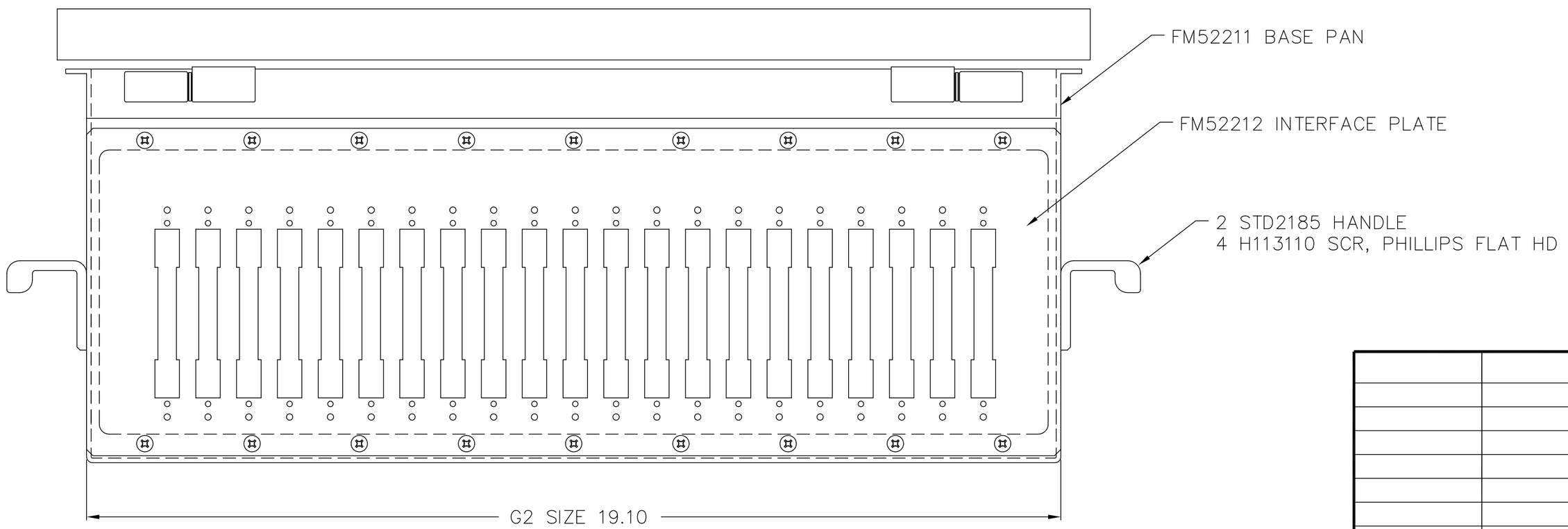

NEXT ASSY	USED ON
APPLICATION	

UNLESS OTHERWISE SPECIFIED DIMENSIONS ARE IN INCHES [MM]
TOLERANCES ARE:

.XX	.XXX	ANGLES
±.015	±.005	±1/2°

MATERIAL

FINISH

DO NOT SCALE DRAWING

H+W TEST PRODUCTS
SEEKONK, MASSACHUSETTS

FIXTURE ASSEMBLY AEROFLEX 52XX

SIZE	FSCM NO.	DRAWING NO.	REV.
E		RM52004	A

SCALE FULL | DRAWN JAG 09/01/2008 | SHEET 1 OF 1

FILE NO.
RM52004A