REVISIONS			
LTR	DESCRIPTION	DATE	APPROVED
A	QUICK TWIST SERIES	01/01/04	JAG

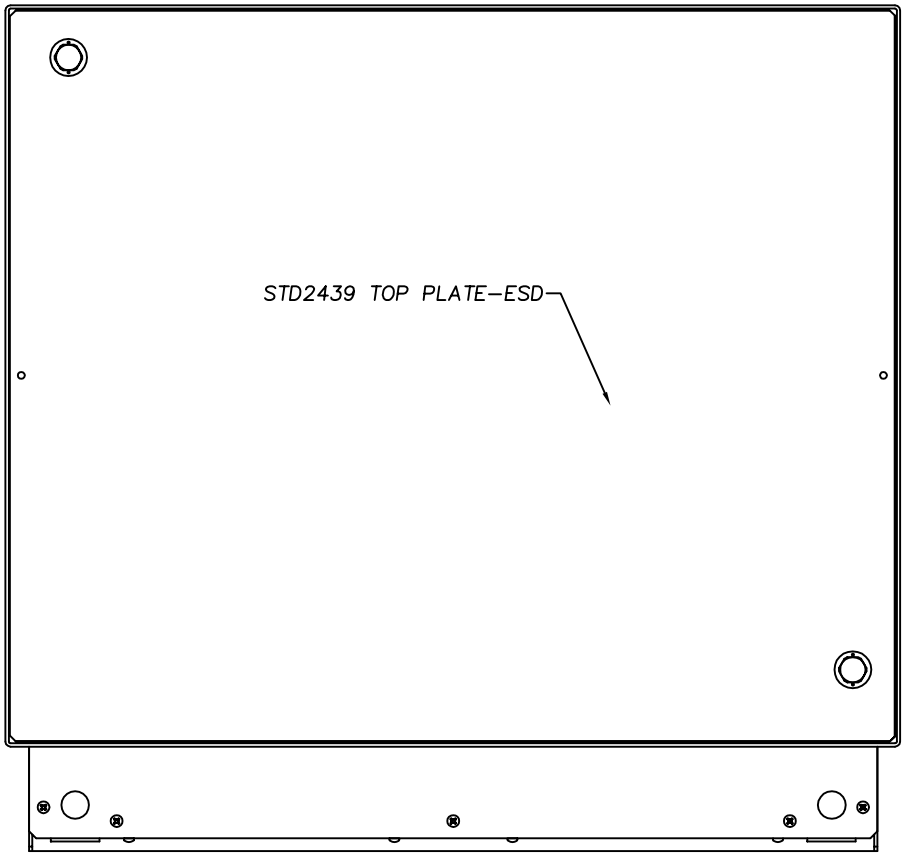

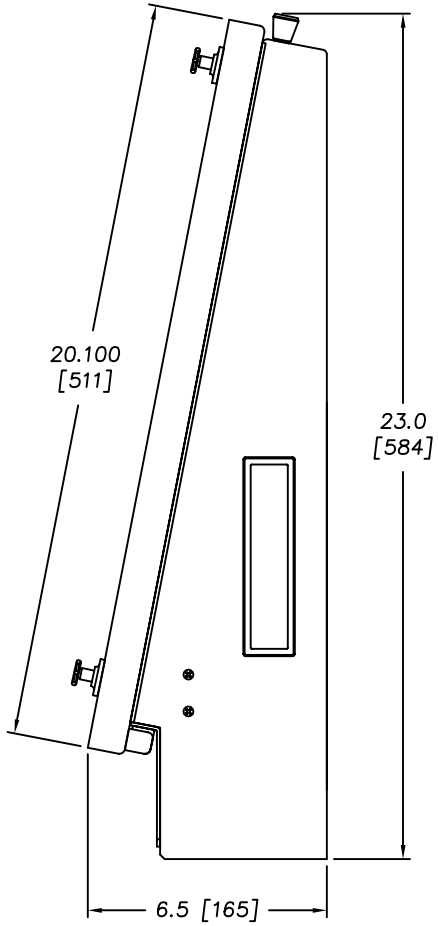

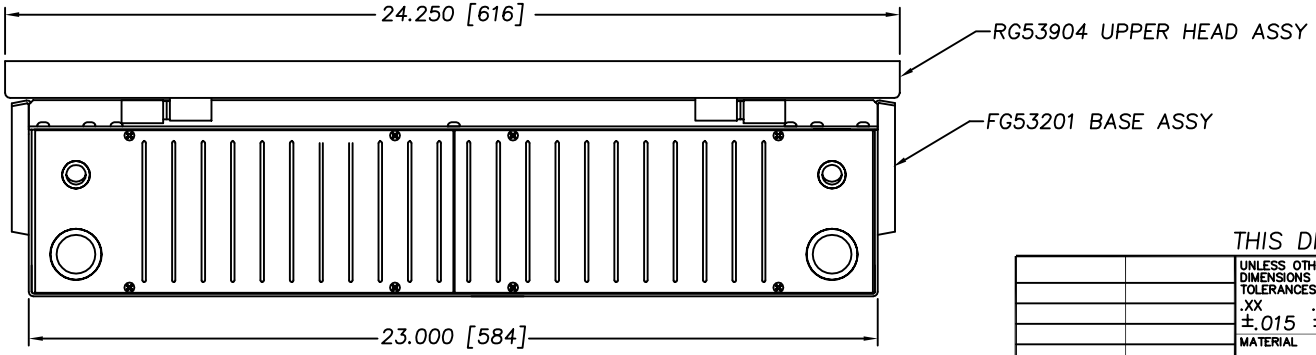

THIS DRAWING IS FOR ASSEMBLY REFERENCE ONLY.

RG53001	RG53001
NEXT ASSY	USED ON
APPLICATION	

UNLESS OTHERWISE SPECIFIED DIMENSIONS ARE IN INCHES (MM) TOLERANCES ARE:

.XX	.XXX	ANGLES
±.015	±.005	±1/2°

MATERIAL: SEE BILL OF MATERIALS

FINISH: SEE NOTES

DO NOT SCALE DRAWING

H+W TEST PRODUCTS
SEEKONK, MASSACHUSETTS

FIXTURE ASSEMBLY
GENRAD 2275/2276

SIZE	FSCM NO.	DRAWING NO.	REV.
E		RG53004	A

SCALE FULL | DRAWN JAG 11/9/95 | SHEET 1 OF 1

FILE NO. RG53004A